Analysis and Design of LLC Resonant Converter with Integrated Transformer

Hangseok Choi
Fairchild Semiconductor
82-3, Dodang-dong, Wonmi-gu
Bucheon-si, Gyeonggi-do, Korea

Abstract- **LLC resonant converter has a lot of advantages over the conventional series resonant converter and parallel resonant converter; narrow frequency variation over wide load and input variation, Zero Voltage Switching (ZVS) for entire load range and integration of magnetic components. This paper presents analysis and design consideration for half-bridge LLC resonant converter with integrated transformer. Using the fundamental approximation, the gain equation is obtained, where the leakage inductance in the transformer secondary side is also considered. Based on the gain equation, the practical design procedure is investigated to optimize the resonant network for a given input/output specifications. The analysis and design procedure are verified through an experimental prototype converter.**

I. INTRODUCTION

The Conventional PWM technique processes power by controlling the duty cycle and interrupting the power flow. All the switching devices are hard-switched with abrupt change of currents and voltages, which results in severe switching losses and noises. Meanwhile, the resonant switching technique process power in a sinusoidal form and the switching devices are softly commutated. Therefore, the switching losses and noises can be dramatically reduced. This also allows the reduction of the passive component size by increasing the switching frequency. For this reason, resonant converters have drawn a lot of attentions in various applications [1-3]. Among many resonant converters, half-bridge LLC-type series-resonant converter has been the most popular topology for many applications since this topology has many advantages over other topologies; it can regulate the output over wide line and load variations with a relatively small variation of switching frequency, it can achieve zero voltage switching (ZVS) over the entire operating range, the magnetic components can be integrated into a transformer and all essential parasitic elements, including junction capacitances of all semi-conductor devices, are utilized to achieve ZVS.

While a lot of researches have been done on the LLC resonant converter topology ever since this topology was first introduced in 1990's [4], most of the researches have focused on the steady state analysis rather than practical design consideration. In [5], the low noise features were mainly investigated and no design procedure was studied. Reference [6] discussed the above resonance operation in buck mode only, where LLC topology was introduced as "LCL type series resonant converter." In [7], detailed analysis was done on the buck mode operation as well as on the boost mode operation, but no design consideration was given. References [8-12] investigated LLC topology in detail using fundamental approximation, but simplified the AC equivalent circuit by ignoring the leakage inductance in the secondary side. In general, the magnetic components of the LLC resonant converter are implemented with one core by utilizing the leakage inductance as the resonant inductor and consequently the leakage inductance exists not only in the primary side but also in the secondary side. Since the leakage inductance in the secondary side affects the gain equation, ignoring the leakage inductance in the secondary side results in incorrect design.

This paper presents design consideration for half bridge LLC resonant converter. Using the fundamental approximation, the gain equation is obtained, where the leakage inductance in the transformer secondary side is also considered. Based on the gain equation, the practical design procedure is investigated to optimize the resonant network for a given input/output specifications. The design procedure is verified through an experimental prototype converter of 120W half-bridge LLC resonant converter.

II. OPERATION PRINCIPLES AND FUNDAMENTAL APPROXIMATION

Fig. 1 shows the simplified schematic of half-bridge LLC resonant converter. The magnetic components are integrated into a transformer; L_m is the magnetizing inductance and L_{lkp} and L_{lks} are the leakage inductances in the primary and secondary, respectively. Fig. 2 shows the typical waveforms of LLC resonant converter. Operation of the LLC resonant converter is similar as that of the conventional LC series resonant converter. The only difference is that the value of the magnetizing inductance is relatively small and therefore the resonance between L_m+L_{lkp} and C_r affects the converter operation. Since the magnetizing inductor is relatively small, there exists considerable amount of magnetizing current (I_m).

In general, the LLC resonant topology consists of three stages as shown in Fig. 1; square wave generator, resonant network and rectifier network.

1-4244-0714-1/07/$20.00 ©2007 IEEE.

- The square wave generator produces a square wave voltage, V_d by driving switches, Q1 and Q2 with alternating 50% duty cycle for each switch. The square wave generator stage can be built as a full-bridge or half bridge type.
- The resonant network consists of capacitor and leakage inductances and magnetizing inductance of the transformer. The resonant network has an effect of filtering the higher harmonic currents. Thus, essentially only sinusoidal current is allowed to flow through the resonant network even though square wave voltage is applied to the resonant network. The current is lagging the voltage applied to the resonant network (that is, the fundamental component of the square wave applied by the half-bridge totem pole), which allows the MOSFETs to be turned on with zero voltage. As can be seen in Fig. 2, the MOSFET turns on while the current is flowing through the anti-parallel diode and the voltage across the MOSFET is zero.
- The rectifier network produces DC voltage by rectifying the AC current with a capacitor. The rectifier network can be implemented as a full-wave bridge or center-tapped configuration with capacitive output filter.

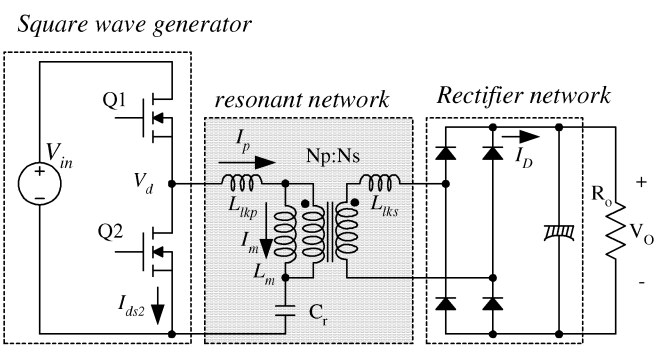

Figure 1. A schematic of half-bridge LLC resonant converter

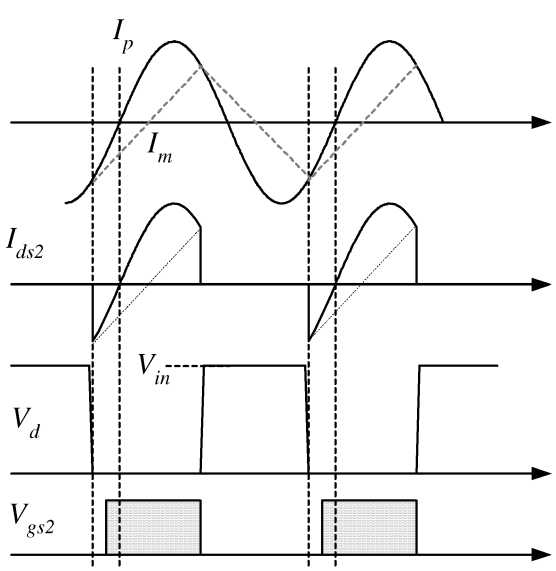

Figure 2. Typical waveforms of half-bridge LLC resonant converter

The filtering action of the resonant network allows the classical fundamental approximation to obtain the voltage gain of the resonant converter, which assumes that only the fundamental component of the square-wave voltage input to the resonant network contributes to the power transfer to the output. Because the rectifier circuit in the secondary side acts as an impedance transformer, the equivalent load resistance is different from actual load resistance. Fig. 3 shows how this equivalent load resistance is derived. The primary side circuit is replaced by a sinusoidal current source, I_{ac} and a square wave of voltage, V_{RO} appears at the input to the rectifier. Since harmonic components of V_{RO} are not involved in the power transfer, AC equivalent load resistance can be calculated by dividing the fundamental component of V_{RO} by I_{ac} as

$$R_{ac} = \frac{V_{RO}^{F}}{I_{ac}} = \frac{8}{\pi^2}\frac{V_o}{I_o} = \frac{8}{\pi^2}R_o \qquad (2)$$

By using the equivalent load resistance, the AC equivalent circuit is obtained as illustrated in Fig. 4.

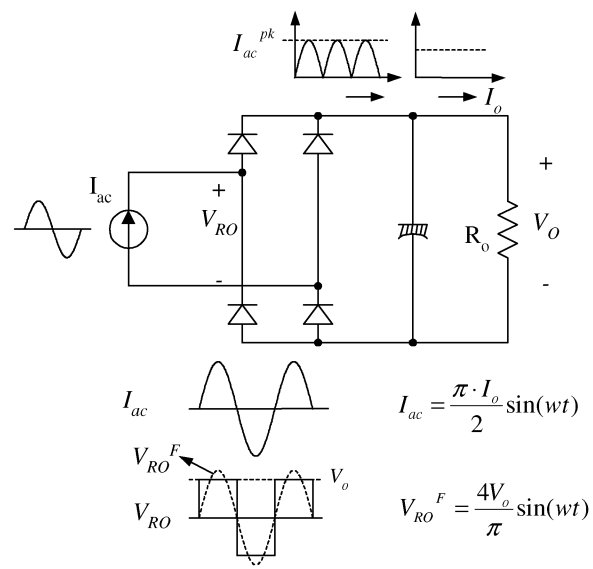

Figure 3. Derivation of equivalent Load resistance R_{ac}

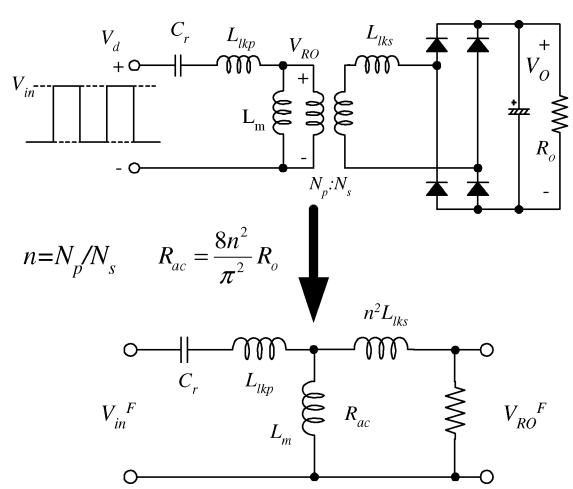

Figure 4. AC equivalent circuit for LLC resonant converter

With the equivalent load resistance obtained in (2), the characteristics of the LLC resonant converter can be derived. Using the AC equivalent circuit of Fig. 4, the voltage gain is obtained as

$$M = \frac{2n \cdot V_O}{V_{in}} = \left| \frac{\omega^2 L_m R_{ac} C_r}{j\omega \cdot (1 - \frac{\omega^2}{\omega_o^2}) \cdot (L_m + n^2 L_{lks}) + R_{ac}(1 - \frac{\omega^2}{\omega_p^2})} \right| \quad (3)$$

where

$$R_{ac} = \frac{8n^2}{\pi^2} R_o$$

$$L_p = L_m + L_{lkp} \ , \ L_r = L_{lkp} + L_m // (n^2 L_{lks})$$

$$\omega_o = \frac{1}{\sqrt{L_r C_r}} \ , \ \omega_p = \frac{1}{\sqrt{L_p C_r}}$$

As can be seen in (3), there are two resonant frequencies. One is determined by L_r and C_r while the other is determined by L_p and C_r. In actual transformer, L_p and L_r can be measured in the primary side with the secondary side winding open circuited and short circuited, respectively.

Important feature that should be observed in (3) is that the gain is fixed at resonant frequency (w_o) regardless of the load variation, which is given as

$$M_{@\,\omega=\omega_o} = \frac{L_m}{L_p - L_r} = \frac{L_m + n^2 L_{lks}}{L_m} \quad (4)$$

Without considering the leakage inductance in the transformer secondary side, the gain in (4) becomes unity. In the previous research, the leakage inductance in the transformer secondary side was ignored to simplify the gain equation [7-12]. However, as observed, there exists considerable error when ignoring the leakage inductance in the transformer secondary side, which generally results in non optimized design.

By assuming that $L_{lkp}=n^2L_{lks}$, the gain in (2) can be simplified as

$$M = \frac{2n \cdot V_O}{V_{in}} = \left| \frac{(\frac{\omega^2}{\omega_p^2}) \frac{k}{k+1}}{j(\frac{\omega}{\omega_o}) \cdot (1 - \frac{\omega^2}{\omega_o^2}) \cdot Q \frac{(k+1)^2}{2k+1} + (1 - \frac{\omega^2}{\omega_p^2})} \right| \quad (5)$$

where

$$k = \frac{L_m}{L_{lkp}} \quad (6)$$

$$Q = \frac{\sqrt{L_r / C_r}}{R_{ac}} \quad (7)$$

The equation (4) is plotted in Fig. 5 for different Q values with k=5 and f_o=100kHz. The gain at the resonant frequency (w_o) is also simplified in terms of k as

$$M_{@\,\omega=\omega_o} = \frac{L_m + n^2 L_{lks}}{L_m} \cong \frac{L_m + L_{lkp}}{L_m} = \frac{k+1}{k} \quad (8)$$

As observed in Fig. 5, the LLC resonant converter shows nearly load independent characteristics when the switching frequency is around the resonant frequency. This is a distinctive advantage of LLC-type resonant converter over conventional series-resonant converter. Therefore, it is natural to operate the converter around the resonant frequency to minimize the switching frequency variation at light load condition.

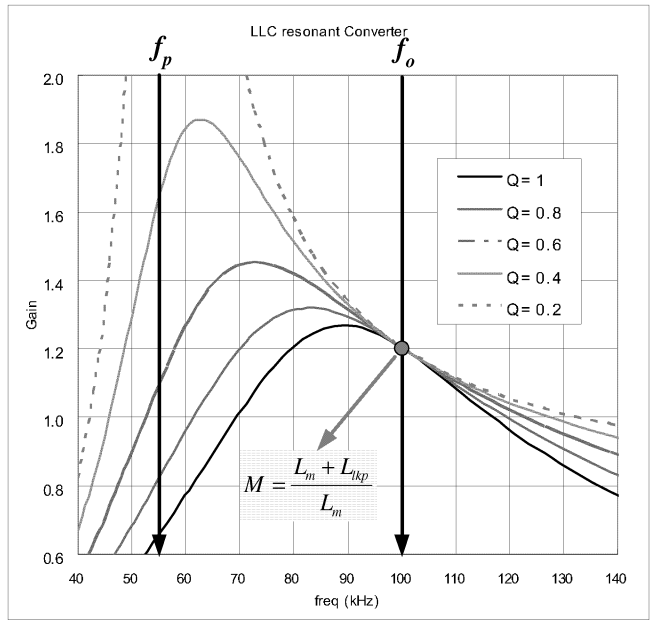

Figure 5. Typical gain curves of LLC resonant converter

The operation range of LLC resonant converter is determined by the available peak voltage gain. As shown in Fig. 5, higher peak gain is obtained as Q decreases (as load decreases). Another important factor that determines the peak gain is the ratio between L_m and L_{lkp} which is defined as k in (5). Even though the peak gain at a given condition can be obtained by using the gain in (4), it is difficult to express the peak gain in explicit form. Moreover, the gain obtained from (4) has some error at frequencies below the resonant frequency (f_o) due to the fundamental approximation. In order to simplify the analysis and design, the peak gains are obtained using simulation tool and depicted in Fig. 6, which shows how the gain varies with Q for different k values. It appears that higher peak gain can be obtained by reducing k or Q values. With a given resonant frequency (f_o), decreasing k or Q means reducing the magnetizing inductance, which results in increased circulating current. Accordingly, there is a trade-off between the available gain range and conduction loss.

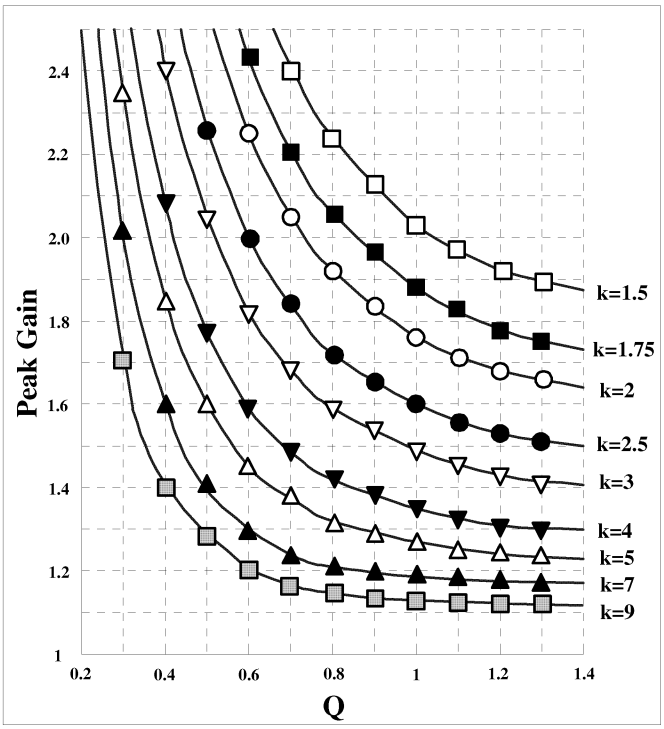

Figure 6. Peak gain versus Q for different k values

III. Design Consideration

Based on the previous analysis, the practical design procedure is presented in this section. It discusses optimizing the resonant network for a given input/output specifications.

(1) Operation mode: While the conventional LC series resonant converter always operates at a frequency above the resonant frequency, LLC resonant converter can operate at frequency below or above the resonance frequency. Fig 8 shows the waveforms of the currents in the transformer primary side and secondary side. As can be observed, operation below the resonant frequency (case I) allows the soft commutation of the rectifier diodes in the secondary side while the circulating current is relatively large. Meanwhile, operation above the resonant frequency (case II) allows the circulating current to be minimized, but the rectifier diodes are not softly commutated. Thus, below resonance operation is preferred for high output voltage application where reverse recovery loss in the rectifier diode is severe. On the other hand, above resonance operation can show better efficiency for application where the output voltage is low and schottky diodes are available for the secondary side rectifiers since the conduction loss is minimized.

(2) Maximum Gain: The operation range of LLC resonant converter is determined by the available peak voltage gain. Since the peak gain takes place when the converter operates at the boundary of zero voltage switching (ZVS) and zero current switching (ZCS) mode, ZVS condition is lost at the maximum gain condition [12]. Therefore, some margin is required when determining the maximum gain. Based on the maximum gain, the proper Q and k values can be obtained from Fig. 6. Even though higher gain is obtained with small k, too small k value results in poor coupling of the transformer. It is typical to set k to be 5~10, which results in a gain of 1.1~1.2 at the resonant frequency.

The value of k affects the losses of the converter. The major portion of the conduction loss is caused by the magnetizing current whose peak value is given by

$$I_m^{pk} = \frac{nV_o}{L_m}\frac{T_s}{4} \tag{8}$$

The value of k also affects the switching loss. Since the turn-on switching loss is removed by zero voltage switching, the turn-off switching loss is dominant. The turn off switching loss is proportional to the turn-off current, which is same as the peak magnetizing current of (8). Therefore, magnetizing current should be minimized for high efficiency.

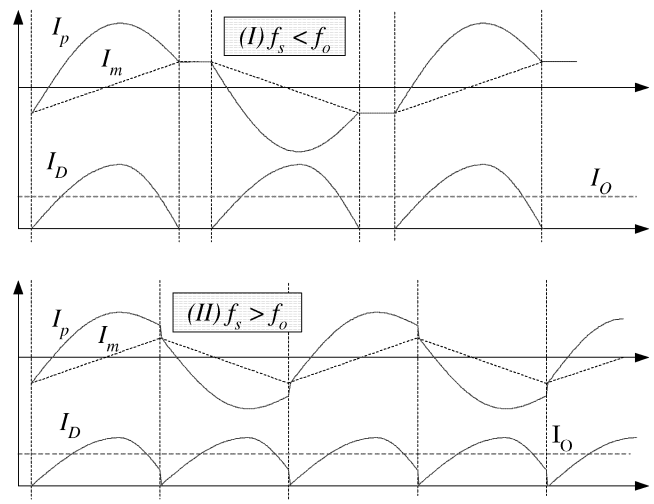

Figure 7. Waveforms of current in the transformer primary side and secondary sides for difference operation modes

IV. Experimental Results

In order to show validity of the previous analysis and design consideration, an experimental prototype converter of 120W half-bridge LLC resonant converter has been built and tested. The schematic of the converter and circuit components are shown in Fig. 8. The input voltage is 220Vac~270Vac and the output is 24V/5A. In terms of DC voltage, the input voltage is 260~380V considering holdup time.

The ratio (k) between L_m and L_{lkp} is determined as 6.5, which results in the gain at the resonant frequency as

$$M_{@\,\omega=\omega_o} = \frac{k+1}{k} = 1.15 \tag{9}$$

As observed in the previous analysis, there is a trade-off between the available gain range and conduction loss. Since the input voltage varies over wide range, if the converter is designed to operate only at below resonance frequencies, the excessive circulating current can deteriorate the efficiency.

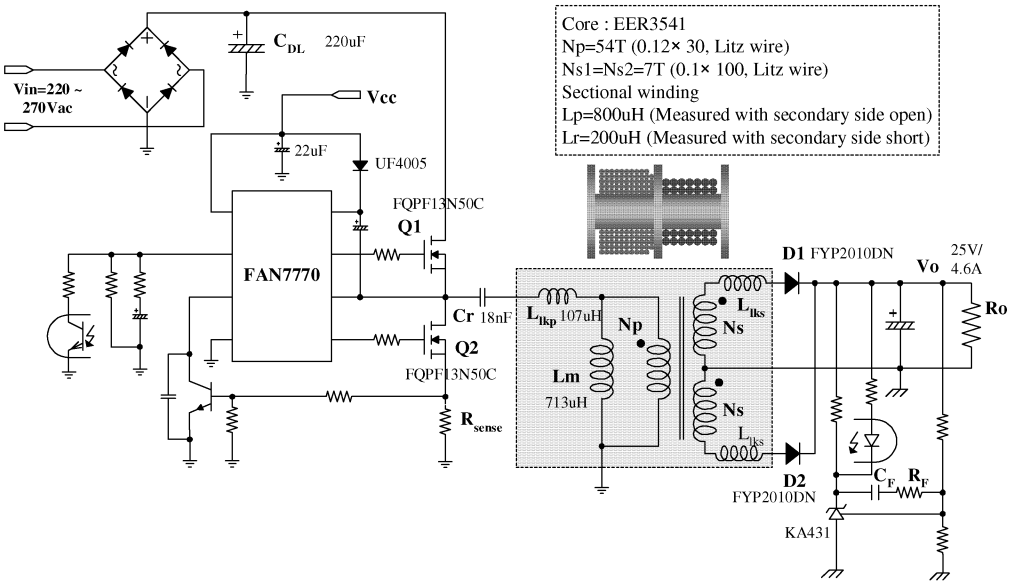

Figure.8 Schematic of half-bridge LLC resonant converter

Thus, the converter is designed to operate above resonance at high input voltage condition and below resonance at low input voltage to minimize the conduction loss caused by circulating current. The minimum gain at full load is determined as 1.0. With the minimum gain, the transformer turn ratio is obtained as

$$n = \frac{N_p}{N_s} = \frac{M_{\min} \cdot V_{in}^{\max} / 2}{(V_o + V_F)} = \frac{1 \cdot 380/2}{(24+0.8)} = 7.66 \qquad (10)$$

where V_F is the diode forward voltage drop.

The maximum gain to cover the input voltage variation is 380/260=1.46. With 10% margin, maximum gain of 1.6 is required. From the gain curves in Fig 9, Q is obtained as 0.4.

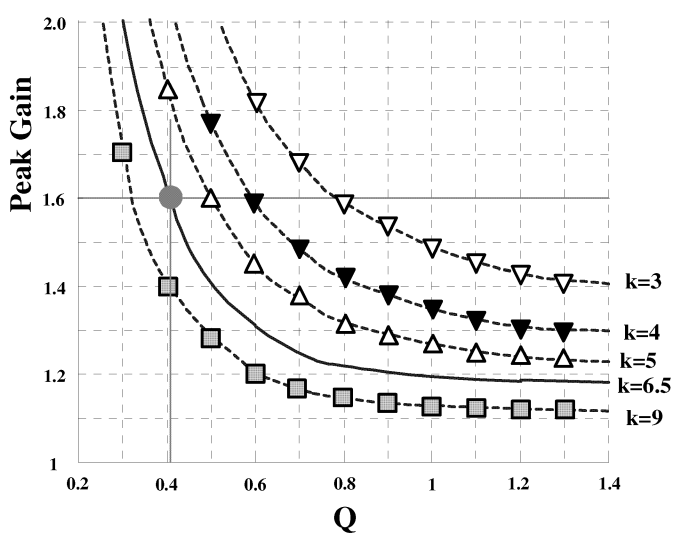

Figure 9. Design gain curves

By selecting the resonant frequency as 85kHz, the resonant network is determined as L_m=713uH, L_{lkp}=107uH (L_p=800uH, L_r=200uH) and C_r=18nF. The transformer is implemented with a sectional stacking method to increase the leakage inductance as depicted in Fig. 8.

Fig. 10 and 11 show the operation waveforms for full load condition with input voltage of 220Vac and 270Vac, respectively. Fig. 12 and 13 show the operation waveforms for no load condition with input voltage of 220Vac and 270Vac, respectively. As can be seen, ZVS is achieved for entire input/output range.

Fig. 14 shows the measured efficiency. As expected, efficiency decreases for low input voltage condition due to the increased circulating current.

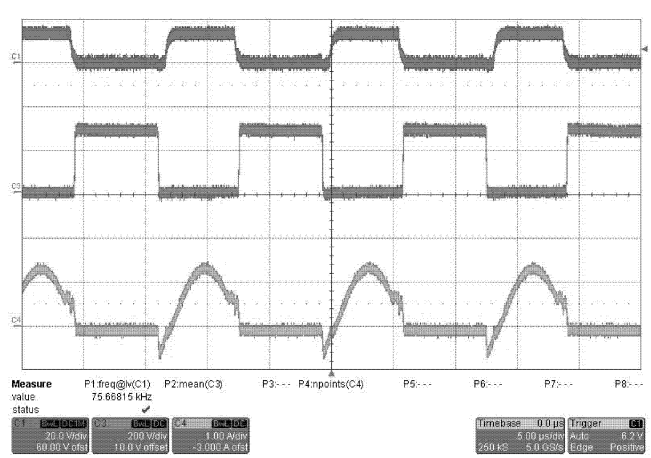

Figure 10. Operation waveforms : 220Vac input and full load
C1: gate drive signal (20V/div), C3: Drain voltage (200V/div)
C4: Drain current (1A/div)

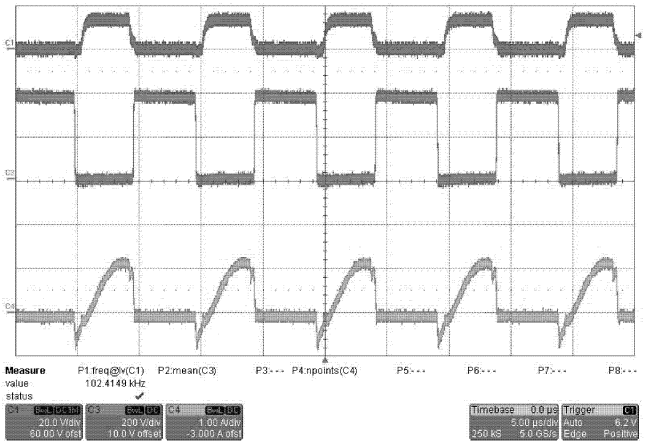

Figure 11. Operation waveforms : 270Vac input and full load
C1: gate drive signal (20V/div), C3: Drain voltage (200V/div)
C4: Drain current (1A/div)

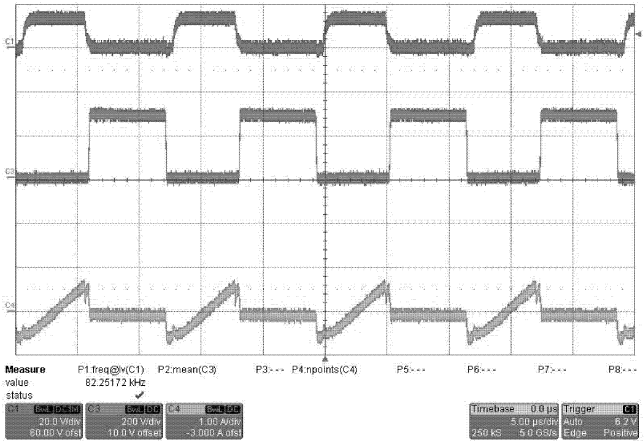

Figure 12. Operation waveforms : 220Vac input and no load
C1: gate drive signal (20V/div), C3: Drain voltage (200V/div)
C4: Drain current (1A/div)

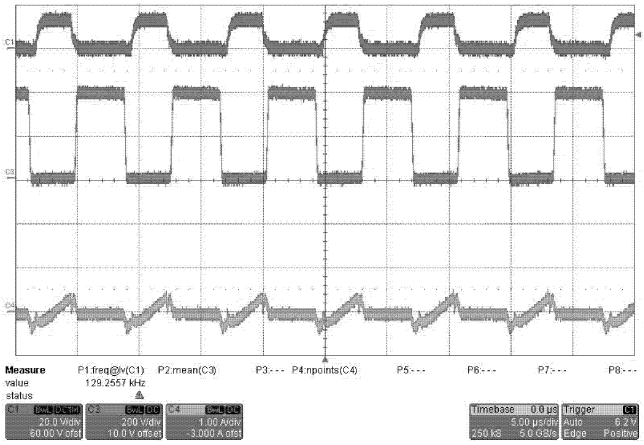

Figure 13. Operation waveforms : 270Vac input and no load
C1: gate drive signal (20V/div), C3: Drain voltage (200V/div)
C4: Drain current (1A/div)

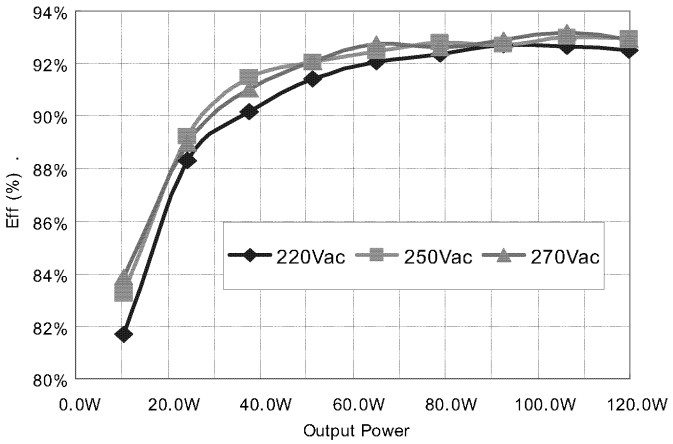

Figure 14. Measured efficiency

V. CONCLUSION

This paper has presented design consideration for LLC resonant converter with integrated transformer, which utilizes the leakage inductances and magnetizing inductance of transformer as resonant components. The leakage inductance in the transformer secondary side was also considered in the gain equation. The design procedure was verified through experimental results.

REFERENCES

[1] Robert L. Steigerwald, "A Comparison of Half-bridge resonant converter topologies", IEEE Transactions on Power Electronics, Vol. 3, No. 2, April 1988.

[2] A. F. Witulski and R. W. Erickson, "Design of the series resonant converter for minimum stress," IEEE Transactions on Aerosp. Electron. Syst., Vol. AES-22, pp. 356-363, July 1986

[3] Y. G. Kang, A. K. Upadhyay, D. L. Stephens, "Analysis and design of a half-bridge parallel resonant converter operating above resonance," IEEE Transactions on Industry Applications Vol. 27, March-April 1991 pp. 386 - 395

[4] Yasuhito Furukawa, Kouichi Morita, Taketoshi Yoshikawa "A High Efficiency 150W DC/DC Converter" Intelec 1994, pp.148-153

[5] Koichi Morita "Novel Ultra Low-noise Soft switch-mode Power Supply", Intelec 1998, pp.115-122

[6] Ashoka K. S. Bhat, "Analysis and Design of LCL-Type Series Resonant Converter", IEEE Transactions on Industrial Electronics, Vol. 41, No. 1, Feb. 1994.

[7] J. F. Lazar and R. Martineli "Steady-state analysis of the LLC series resonant converter, APEC 2001, 728-735

[8] Yan Liang, Wenduo Liu, Bing Lu, van Wyk, J.D, " Design of integrated passive component for a 1 MHz 1 kW half-bridge LLC resonant converter", IAS 2005, pp. 2223-2228

[9] B. Yang, F.C. Lee, M. Concannon,"Over current protection methods for LLC resonant converter" APEC 2003, pp. 605 - 609

[10] Yilei Gu, Zhengyu Lu, Lijun Hang, Zhaoming Qian, Guisong Huang, "Three-level LLC series resonant DC/DC converter" IEEE Transactions on Power Electronics Vol.20, July 2005, pp.781 - 789

[11] Bo Yang, Lee, F.C, A.J Zhang, Guisong Huang, "LLC resonant converter for front end DC/DC conversion" APEC 2002. pp.1108 - 1112

[12] Bing Lu, Wenduo Liu, Yan Liang, Fred C. Lee, Jacobus D. Van Wyk, "Optimal design methology for LLC Resonant Converter," APEC 2006. pp.533-538